MULTILINE®
bright with light

Metro-D 100x100mm - 20° ajustable - without recessed housing
36.20093-0000

Fixture details

Mounting	Ground - recessed
Light emission	Indirect - adjustable
Light distribution	adjustable
Fitting cover	Glass
Protection rate	IP 67
Maximum load	1000 kg walk-across (excluding recessing housir
T°	<75 °
Housing	Aluminium/Stainless Steel
Finish	matt black finish RAL 9105
Certificates	CE, ISO 9001



Electric details

Protection class	III
Supply	24V DC

Lamp details

Lamptype	LED 4000K 8°
Wattage	3x1W
Gross luminous flux	399
Luminaire power	4,2W
Cover glass	flat - clear
Number	1
Lifetime LED module	L70/B50 > 60000h
Color tolerance	MacAdam 3
CRI	80

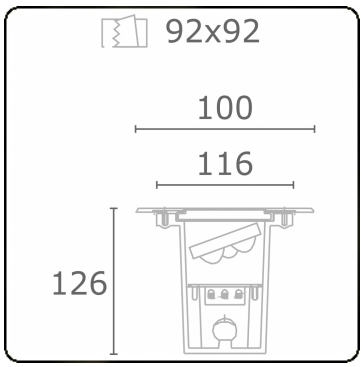

Photometric details

CIE Fluxcode	0 0 0 0 75

Remarks

100x100mm clear glass 20° adjustable

