MULTILINE®
bright with light

Murro-1
35.12193-9910

Fixture details

Mounting	Wall
Light emission	Direct
Fitting cover	Glass
Protection rate	IP 54
Housing	Aluminium
Finish	RAL 9016 traffic white textured
Certificates	CE, ISO 9001



Electric details

Protection class	I
Supply	230V
Control gear box	Current driver

Lamp details

Lamptype	LED 3000K
Wattage	24W
Gross luminous flux	2440
Luminaire power	29W
Number	1
Lifetime LED module	L80/B10 = 50000h
Color tolerance	MacAdam 3
CRI	85

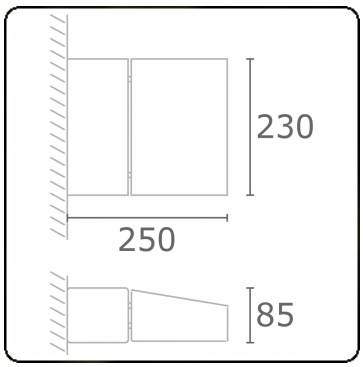

Photometric details

CIE Fluxcode	53 83 97 99 73

Remarks

direct light output

