MULTILINE®
bright with light

Track surface mounted - alu grey
59.30304-7040



Fixture details

Mounting	Ceiling
Protection rate	IP 20
Housing	Aluminium
Finish	RAL 7040 alu grey
Certificates	CE, ISO 9001

Electric details

Protection class	I
Supply	230V

Lamp details

Lamptype	
Socket	

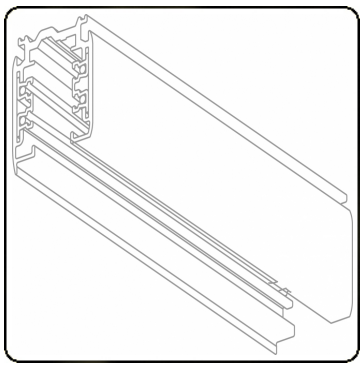

Dimensions

A	4000 mm

Remarks

Conductor 3cct track

