MULTILINE®
bright with light

Re-LED Direct/Indirect satin - HO 225mA - RAL
04.91100803-9999

Fixture details

Mounting	Pendant
Light emission	Direct-Indirect
Fitting cover	satin diffusor
Protection rate	IP 20
Housing	Aluminium
Finish	RAL colour at your choice
Certificates	CE, ISO 9001



Electric details

Protection class	I
Supply	230V
Control gear box	Current driver

Lamp details

Lamptype	LED 3000K
Wattage	6,7W
Gross luminous flux	26050
Luminaire power	152,2W
Number	10
Lifetime LED module	L80/B10 > 102000h
Color tolerance	MacAdam 3
CRI	>80
	+ 10x LED 3000K 7,1W

Photometric details

UGR	>19
CIE Fluxcode	49 80 96 99 70
CIE Fluxcode Indirect	00 00 00 00 73

Dimensions

A	2894 mm

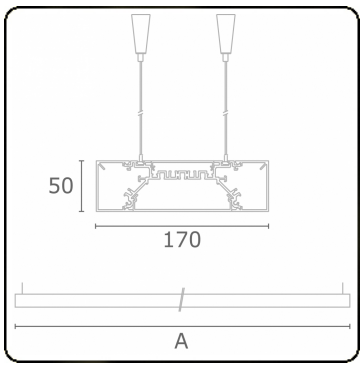

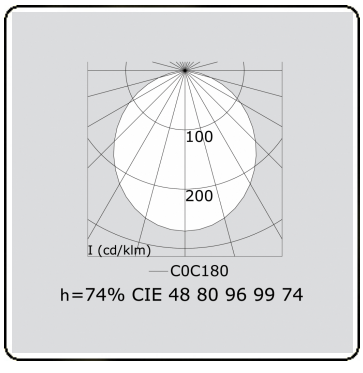

h=74% CIE 48 80 96 99 74

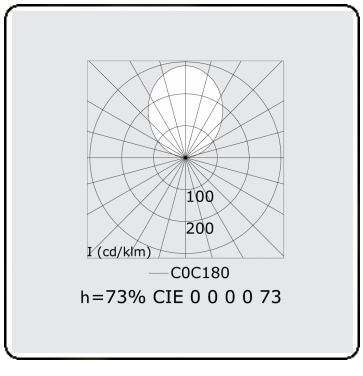

h=73% CIE 0 0 0 0 73

Remarks

Suspended luminaire - Direct - HO 225mA - satin (flush) - RAL

