MULTILINE®
bright with light

Score curved Direct - satin - HO 325mA - RAL 04.87204673-9999

Fixture details

Mounting	Pendant
Light emission	Direct
Fitting cover	satin diffusor
Protection rate	IP 20
Housing	Aluminium
Finish	RAL colour at your choice
Certificates	CE, ISO 9001



Electric details

Protection class	I
Supply	230V
Control gear box	Current driver DALI/TD

Lamp details

Lamptype	LED 3000K
Wattage	7,1W
Gross luminous flux	9415
Luminaire power	55W
Number	7
Lifetime LED module	L80/B10 > 102000h
Color tolerance	MacAdam 3
CRI	>80

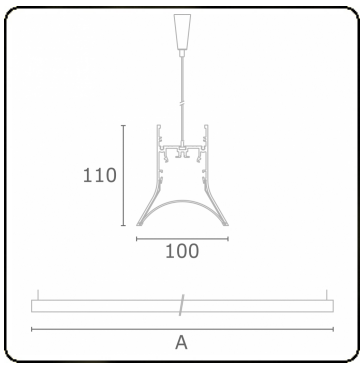

Photometric details

UGR	>19
CIE Fluxcode	54 85 98 99 72

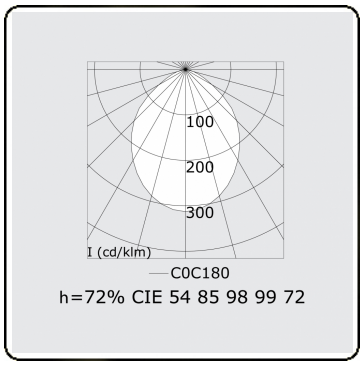

Dimensions

A	1984 mm

Remarks

Suspended luminaire - Direct - HO 325mA - satin - RAL

