MULTILINE®
bright with light

Rekta 80x100 Direct - satin - HO 325mA - RAL
05.68004673-9999

Fixture details



Mounting	Ceiling
Light emission	Direct
Fitting cover	satin diffusor
Protection rate	IP 20
Housing	Aluminium
Finish	RAL colour at your choice
Certificates	CE, ISO 9001

Electric details

Protection class	I
Supply	230V
Control gear box	Current driver DALI/TD

Lamp details

Lamptype	LED 3000K
Wattage	7,1W
Gross luminous flux	9415
Luminaire power	55W
Number	7
Lifetime LED module	L80/B10 > 102000h
Color tolerance	MacAdam 3
CRI	>80

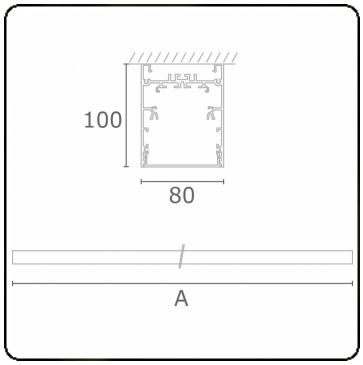

Photometric details

UGR	>19
CIE Fluxcode	54 83 97 100 69

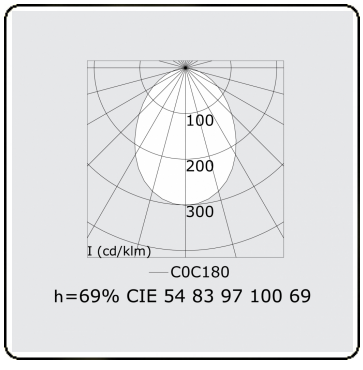

Dimensions

A	1970 mm

Remarks

Ceiling luminaire - Direct - HO 325mA - satin - RAL

